87th Annual Meeting, Washington, D.C.

Reducing Railroad Hazardous Materials Transportation Risk by Route Rationalization

(08-2801)

Athaphon Kawprasert & Christopher P.L. Barkan

Railroad Engineering Program
Department of Civil and Environmental Engineering
University of Illinois at Urbana-Champaign

16 January 2008

ILLINOIS
RAILROAD ENGINEERING PROGRAM

Outline of Presentation

- **Introduction**
  - Overview
  - Research goals
  - Previous studies
- **Nature of Problem**
- **Case study**
- **Methodology**
  - Risk analysis
  - Rationalization of hazmat route structure
- **Results**
- **Conclusions and Discussion**

The Importance of Railroad Transportation Risk Analysis

- There is increased attention from industry and government on effective approaches to risk reduction.
- The challenge is to balance the different aspects involved with hazardous material transportation risk.
- The objective is to develop actionable results regarding risk reduction options.

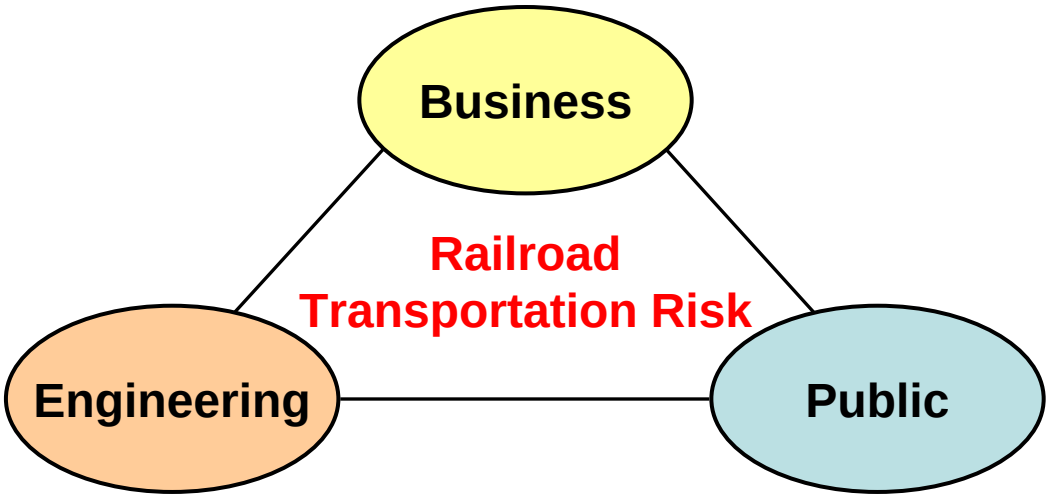

Route Rationalization

- **Route rationalization** is defined here as evaluation of the entire route structure of a particular hazardous material with the objective of reducing risk by considering how the overall route mileage might be reduced.
- Route rationalization involves changing origin-destination (OD) pairs to decrease overall mileage while taking into account production and consumption levels at each OD pair and all major factors affecting risk
- In contrast to ordinary rerouting, route rationalization involves a comprehensive analysis of the entire route structure, rather than simply bypassing particular locations in a network.
- While ordinary rerouting will often increase hazmat mileage traveled, route rationalization will generally reduce this mileage

Goals of the Paper

- Develop and present a basic, formal quantitative structure to enable consideration of route rationalization as an option for managing hazmat transport risk
- Use the model to consider a case study based on rail transport of a selected product
- Preliminarily consider the effect of different risk metrics as objective functions in the optimization process and gain a better understanding of the relationship among these metrics

Literature Review

- There have been a number of studies of hazardous material transportation risk and routing; however, most focus on highway transport.
- Some papers have considered railroad hazmat transportation risk:
  - Rerouting hazmat shipments: Glickman (1983)
  - Comparison of transportation options between road and rail: Glickman (1988), Saccomanno et al. (1989), Bubbico et al. (2004), Verman & Verter (2007)
  - Effects of tank car design: Saat & Barkan (2006), Barkan et al. (2007)

Nature of the Problem

- Hazardous material traffic originates and terminates at numerous locations throughout the North American railroad network

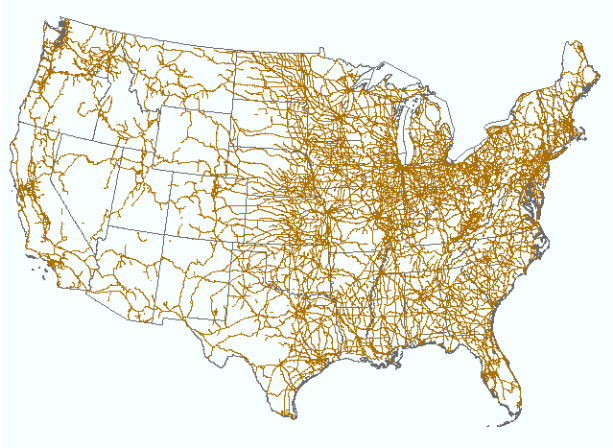

- Route rationalization involves reducing transportation volume by minimizing the car-mileage required to transport the material to various destination points.

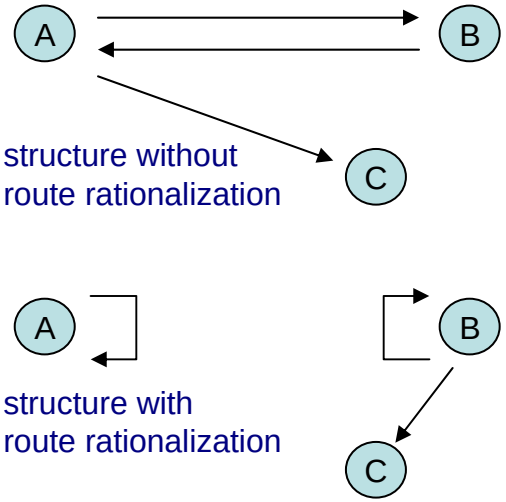

Case Study : Baseline Network Flow

- Traffic flows based on a particular hazardous material being transported on the railroad network was considered.
- The Princeton Transportation Network Model (PTNM) was used to develop maps of traffic volume and directional flows.
- A rail routing software PC*MILER|Rail was used to determine the route mileage between each OD pair.

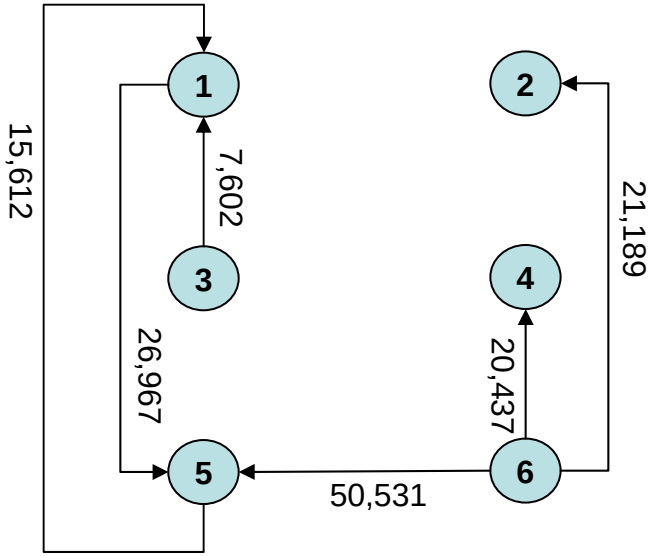

Baseline car-miles = 142,339

Simplified Example

- To rationalize the traffic flow pattern, population exposure, accident likelihood and other factors potentially affecting the risk were first assumed to be homogeneous throughout route structure.
- Under these assumptions risk will be proportional to the length of the route and carload volume on the network.
- The problem in this case reduces to the basic transportation problem in which the objective function is minimization of car-miles.

Minimization of Car-miles

- The optimal network flow in which the total car-miles are minimized was determined by solving the LP problem.

- Using GAMS/Cplex, the optimal solution is 96,121 car-miles, which is 32% lower than the baseline case.

$$\text{Minimize total car-miles} = \sum_{o,d} V_{od} L_{od}$$

subject to:

$$\sum_{o} V_{od} = D_d, \ \forall d \quad \text{(shipment balance at destination d)}$$

$$\sum_{d} V_{od} = S_o, \ \forall o \quad \text{(shipment balance at origin o)}$$

$$\text{and } V_{od}, L_{od} \geq 0 \quad \text{(nonnegative shipments)}$$

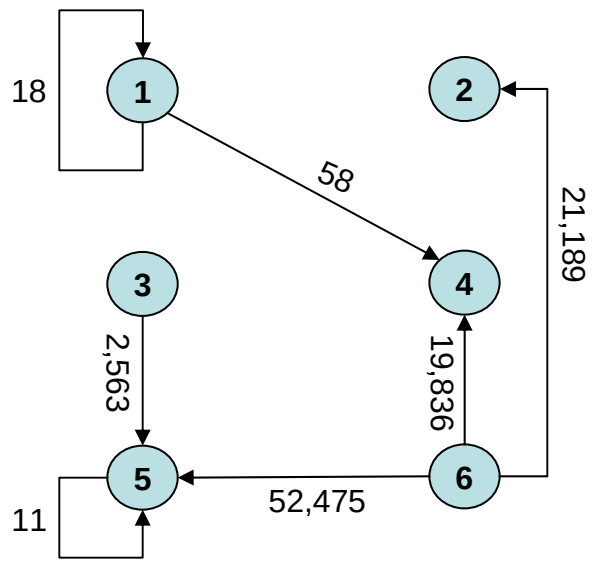

Minimization of Car-miles (cont'd.)

- Minimization of car-miles does not necessarily guarantee minimization of risk.
- This is because the alternate, shorter routes may have higher accident rates and/or higher population density. These factors are, in fact, not homogeneous along the shipment routes.
- Therefore, a more comprehensive approach is necessary to properly consider the risk associated with alternative routing patterns

Risk Model Formulation : Factors and Relationships Influencing Hazardous Materials Transportation Risk

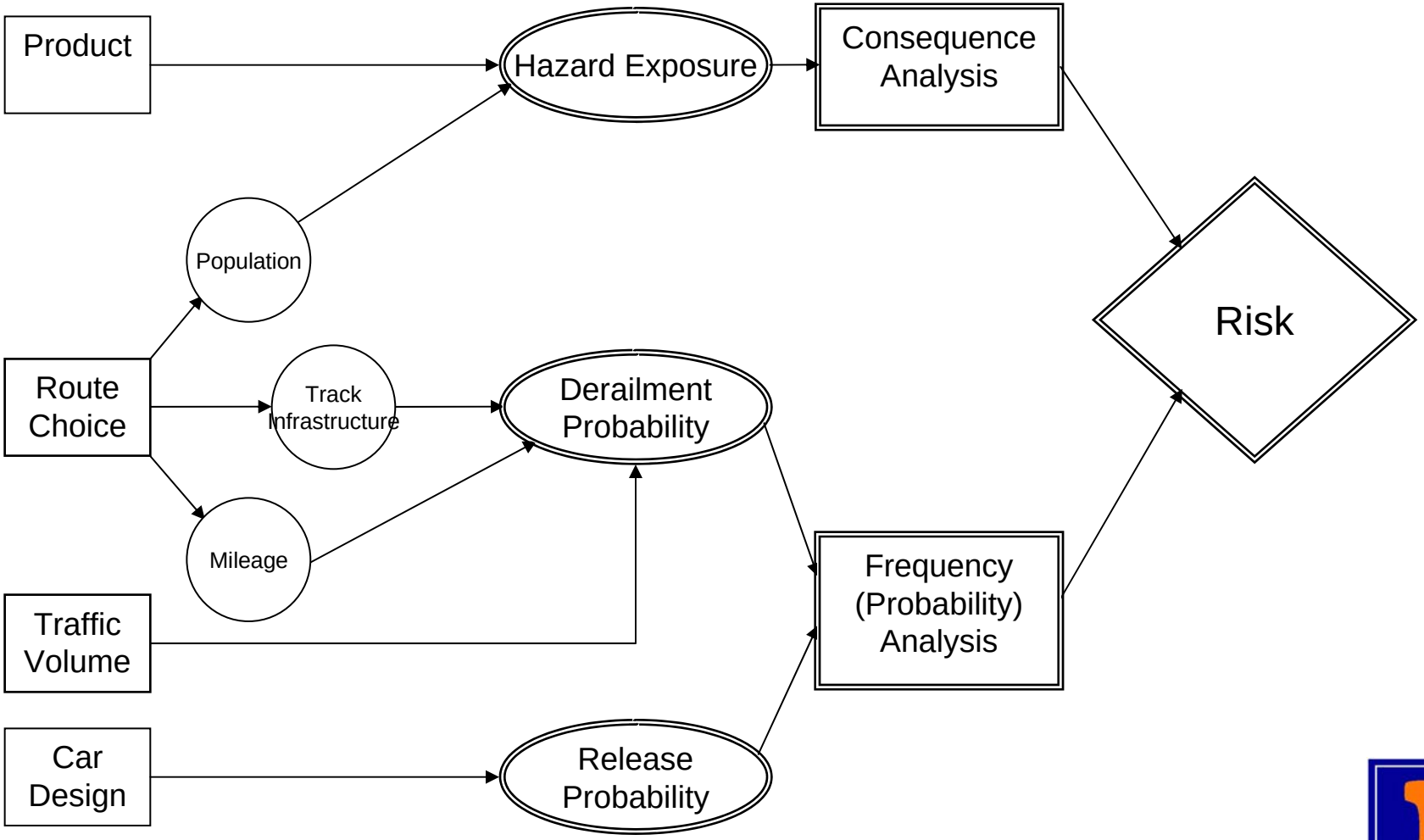

Risk Model Formulation

- **Probability Analysis**
  - Probability of tank car derailment was estimated using FRA track-class-specific accident rates developed by Anderson and Barkan (2004).
  - Conditional probability of a hazardous material release from a tank car given derailment was determined from RSI-AAR Report RA 05-02 (2006).
- **Consequence Analysis**
  - Hazard was determined using the US DOT Emergency Response Guidebook (ERG) recommended evacuation distances for the selected chemical.
  - Population exposure was calculated using a Geographic Information System (GIS) overlay analysis along the routes under consideration

Overlay Analysis using GIS

- An overlay of shipment routes and population density was created using US census tract data* with ArcMap™.
- A buffer was created using the ERG maximum evacuation (downwind) distance for the worst-case release scenario.
- Average population density in the buffer area corresponding to each track segment was estimated.

* ESRI Data & Maps (2005)

Rationalization of Route Structure

- The model was modified to incorporate the risk parameters of interest: the likelihood of tank car derailment, the likelihood of hazardous material release and the consequence of release.

$$\text{Minimize annual risk} = \sum_{s,i,o,d} \underbrace{P(I \mid R, A)_s}_{1} \; \underbrace{P(R \mid A)}_{2} \; \underbrace{Z_{iod} L_{iod} n_{od}}_{3} \; \underbrace{H_s Y_{iod}}_{4}$$

subject to:

$$\left.\begin{aligned} &\sum_{o} n_{od} = N_d, \ \forall d \quad \text{(shipment balance at destination d)} \\ &\sum_{d} n_{od} = N_o, \ \forall o \quad \text{(shipment balance at origin o)} \end{aligned}\right\} 5$$

and n_{od} : nonnegative integer

1: specific release scenario probability
2: release probability
3: derailment probability
4: consequence (persons affected)
5: shipments between OD

Model Flexibility

- The model can be modified to address various possible questions.
  - For example, if only release probability is of interest, the consequence term may be omitted.
  - If risk control is required for any particular OD pair, the maximum tolerable risk level can be specified as a constraint in the model.
  - The route rationalization model should allow flexibility in the analysis to inform policy and planning objectives of interest.

Results

- The model was used to determine the set of optimal traffic flows for the case study, using minimization of three different objective functions: **Car-miles**, **Release Probability**, and **Annual Risk**.
- Each of these results in a different optimized route structure and correspondingly different values for the various risk metrics

		Optimal Traffic Flows		
Metric	**Baseline Case**	**Minimizing Car-miles**	**Minimizing Release Probability**	**Minimizing Annual Risk**
Total car-miles	142,339	96,121	96,722	96,140
Likelihood of Derailment	1.76×10^{-2}	1.29×10^{-2}	1.28×10^{-2}	1.29×10^{-2}
Likelihood of Release	1.22×10^{-3}	8.91×10^{-4}	8.85×10^{-4}	8.90×10^{-4}
Annual Risk	1.29×10^{-1}	1.06×10^{-1}	1.08×10^{-1}	1.06×10^{-1}

Graphical Depiction of Results : Annual Risk vs. Car-miles

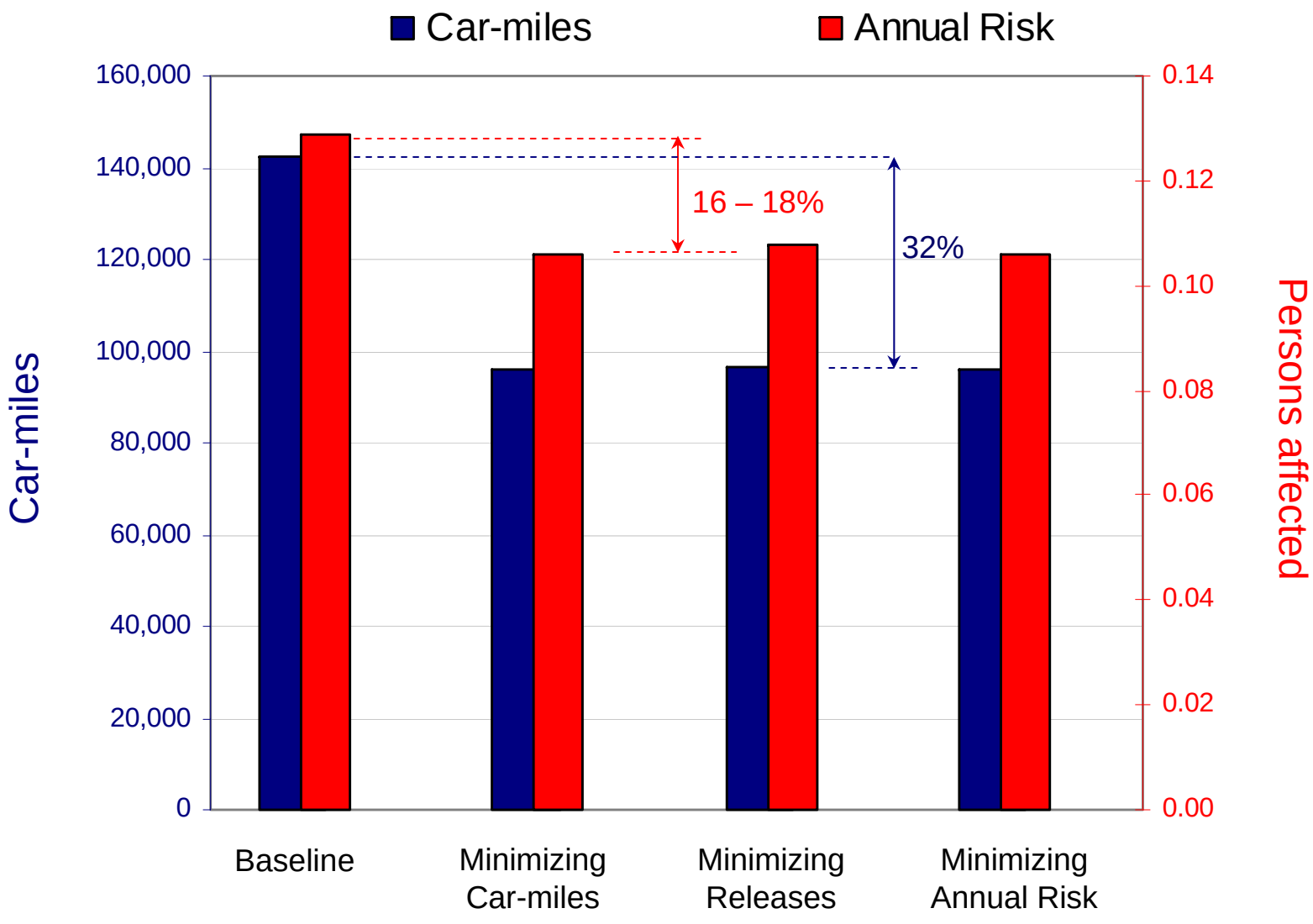

Effect of Different Objective Function on Routing

- Minimized derailment/release probability car flows vs. minimized risk car flows

Minimizing Release Probability

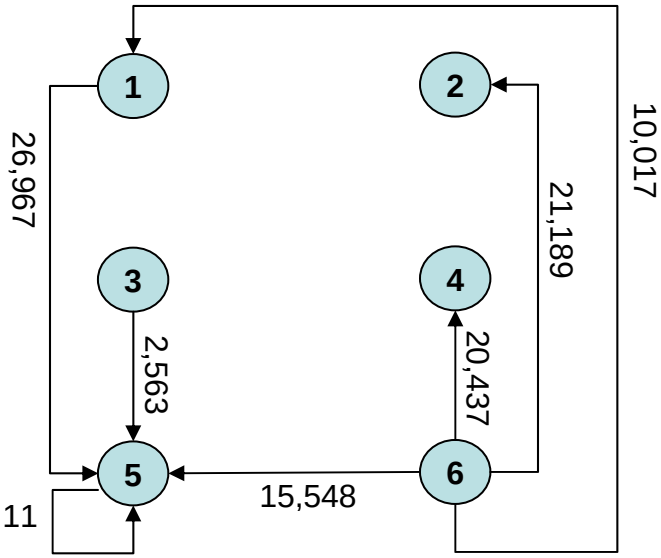

Minimizing Annual Risk

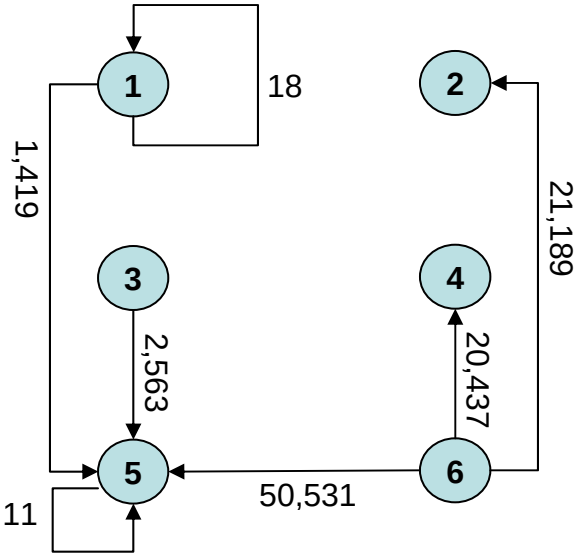

- ‘Risk profiles’ show the distribution of risk in terms of various magnitudes of consequence vs. the probability (or frequency) of the corresponding consequence.

Risk Profile Showing Effects of Different Objective Functions on Risk

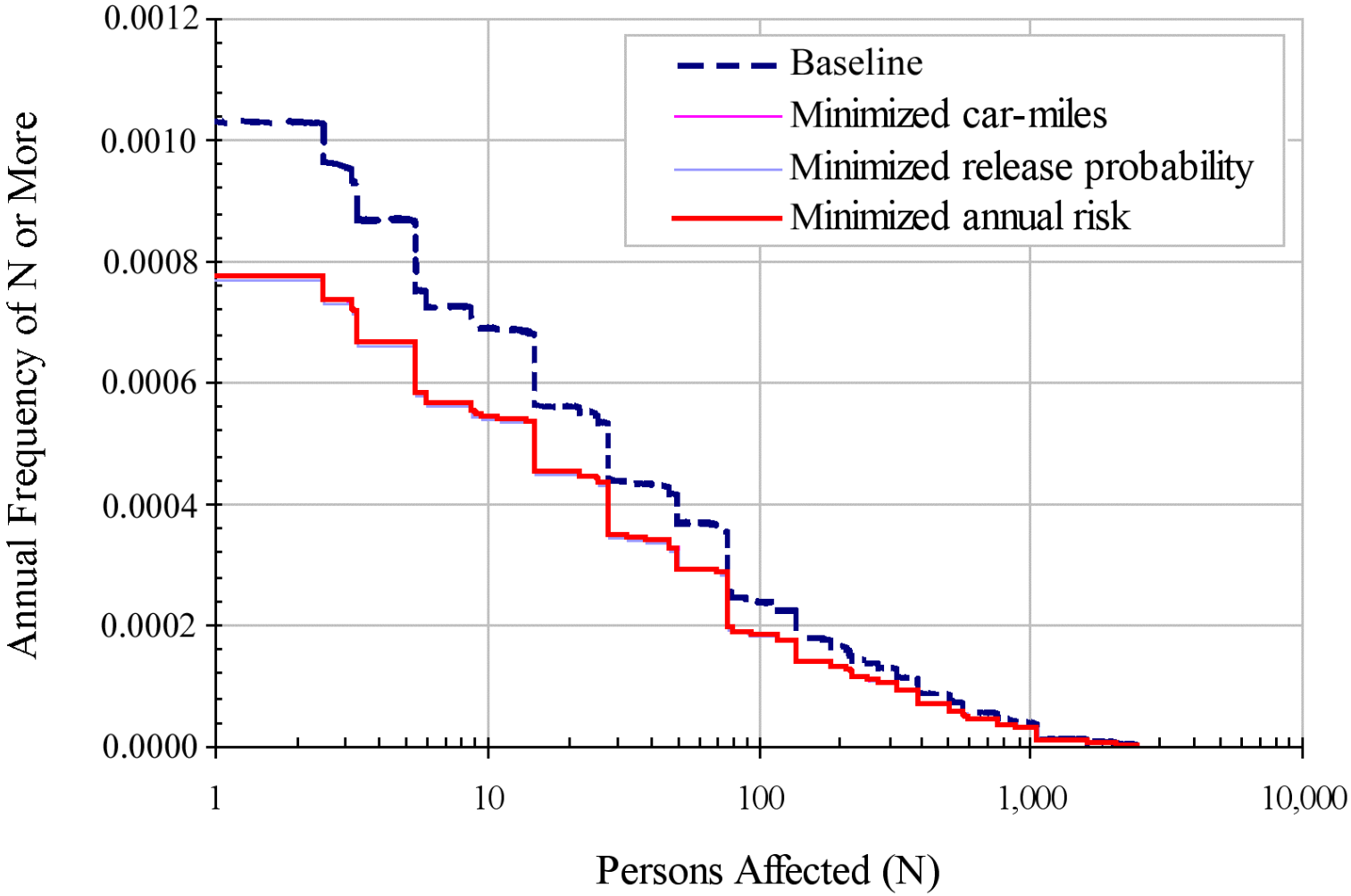

Percentage Reduction in Annual Frequency of N or More Persons Affected
(Rationalized Route Structure Compared to Baseline Case)

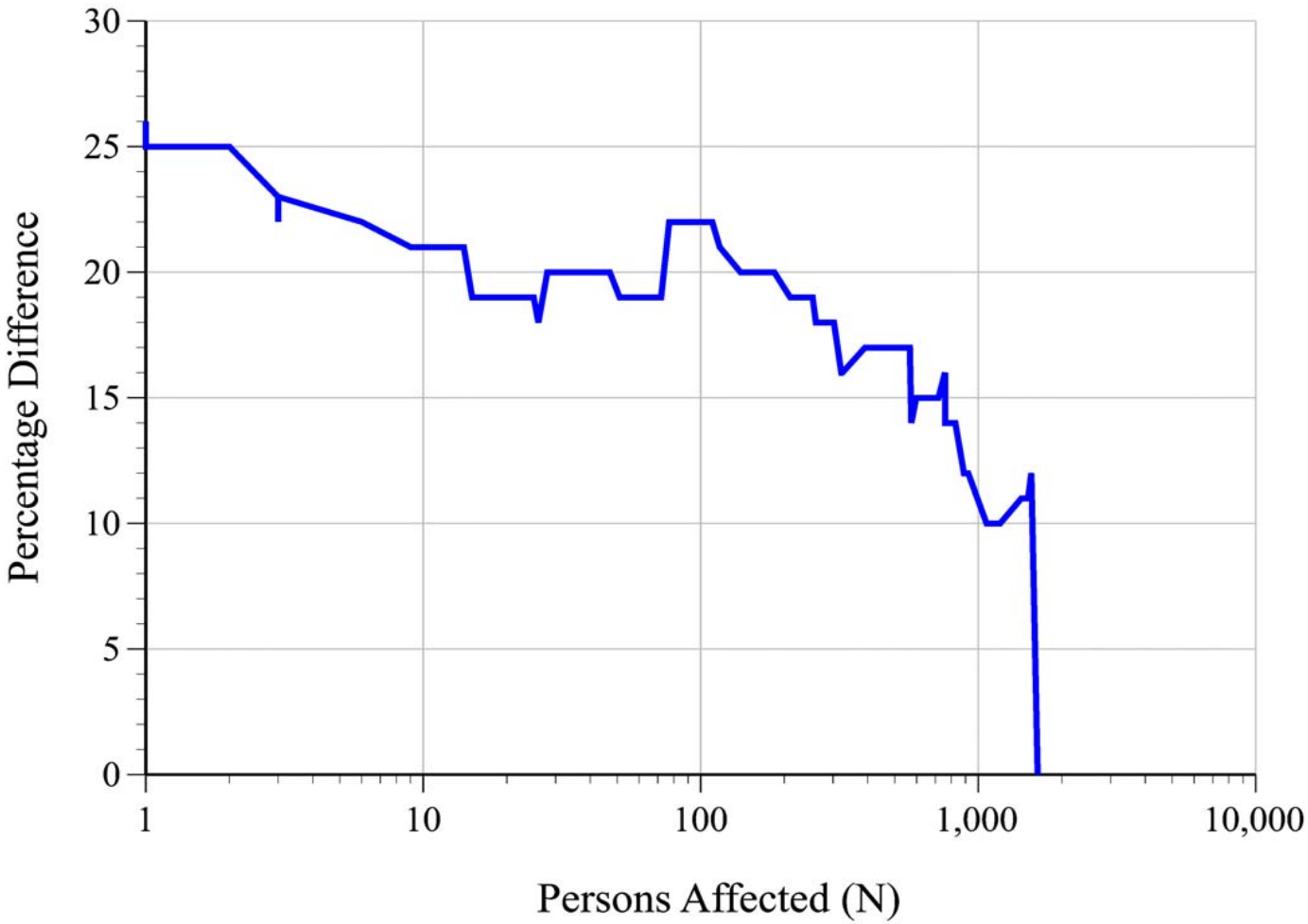

Conclusions

- For the product evaluated, route rationalization provided a 32% potential reduction in car-miles and a 16-18% reduction in risk.
- The rationalized route structure for this particular hazmat tended to disproportionately reduce exposure to lower population density segments compared to higher population segments.
- Use of different objective functions did not result in major differences in risk for the product studied.
- Depending on the circumstances, route rationalization may be worth consideration as a means of managing hazmat transport risk
- The model presented provides an objective approach to evaluating the possible benefits of this approach

Constraints & Limitations of Route Rationalization

- The model and results in this paper represent an idealized case, intended to facilitate consideration of this approach.
- In practice, rerouting may involve more complicated constraints that will limit changes in hazmat distribution patterns.
- For products with complex, overlapping routes, route rationalization may have substantial potential benefits, but for others with simpler, non-overlapping route structures, this technique may offer little opportunity for risk reduction.

VS.

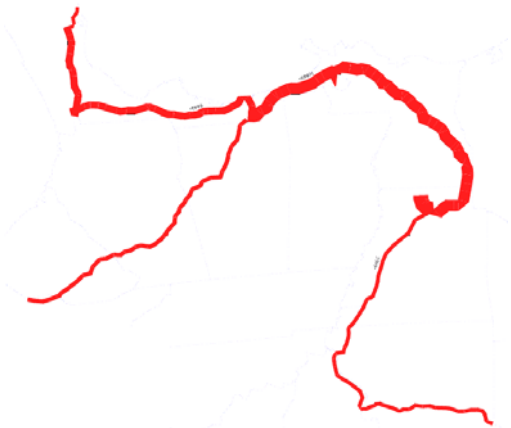

Future Study

- Apply the model to larger, more complex shipment patterns of other products on the North American railroad network.
- Determine other possible factors to consider and develop applicable techniques to refine the model.

Acknowledgements

ASSOCIATION OF AMERICAN RAILROADS
ILLINOIS RAILROAD ENGINEERING PROGRAM